DYNAFLO® 6200E & 6210E
Model Numbers: 62001E, 62003E, 62101E & 62103E

DEPEND ON DAVEY

TRANSFER PUMPS

PRODUCT DESCRIPTION

Rugged economical single stage, open impeller, centrifugal pumps. Designed for total heads to 28m and flow to 270lpm.

APPLICATIONS

- Grey water pumping
- Pumping of water with some soft solids in suspension

DESIGN FEATURES

PUMP

1 stage (single impeller).

Open face impellers.

Noryl pump casing.

Mechanical shaft seal.

Oring casing seal.

MOTOR

Davey manufactured.

2 pole, 2850rpm, 50Hz.

Class F insulation, IP56.

Permanently split capacitor starting - single phase only.

Double contact seal C3, high temperature greased bearings.

Inbuilt thermal overload protection with automatic reset in all 1∅ models.

All models come fitted with a 2m power lead with 10 amp Australian three pin plug for ease of connection to power supply.

BENEFITS

- High TEFC - IP rating for long term protection against vermin, dust and water
- Manufactured from quality corrosion resistant materials
- Proven, robust pump design for long life
- Super quiet operation
- Metal hoop strengthened inlet and outlet ports
- Quick and easy installation
- Low maintenance
- Easy to service if required
- Corrosion resistant motor mounting feet
- Oring sealed hand tightened priming and drain plugs for easy operation

OPERATING LIMITS

	6200E	6210E
Capacities to	190lpm	270lpm
Max. total head	20m	28m
Max. suction head	4m	4m
Max. water temp.		
Continuous	50°C	50°C
10 minute peak	70°C	70°C
Min. water temp.	1°C	1°C
Inlet size BSP(F)	1 1/2"	1 1/2"
Outlet size BSP(F)	1 1/4"	1 1/4"
Max. casing pressure	50m	50m

H/O & MFG SCORESBY Quality System
Quality Endorsed Company
ISO 9001 Lic 10636
Standards Australia

TECHNICAL SPECIFICATIONS

MATERIALS OF CONSTRUCTION

PART	MATERIAL
Impellers	Glass filled polycarbonate
Pump casing	Glass filled noryl
Seal ring (stationary)	Carbon
Seal ring (rotating)	Ceramic
Shaft	Carbon steel (1∅ models) 304 SS (3∅models)
Seal elastomer	Nitrile rubber
Pump orings	Nitrile rubber
Motor shell	Aluminium
Shell finish	Baked enamel
Motor mounting feet	Xenoy® plastic
Motor through bolts	304SS with brass nuts
Motor fan	Galvabond®

HYDRAULIC PERFORMANCE

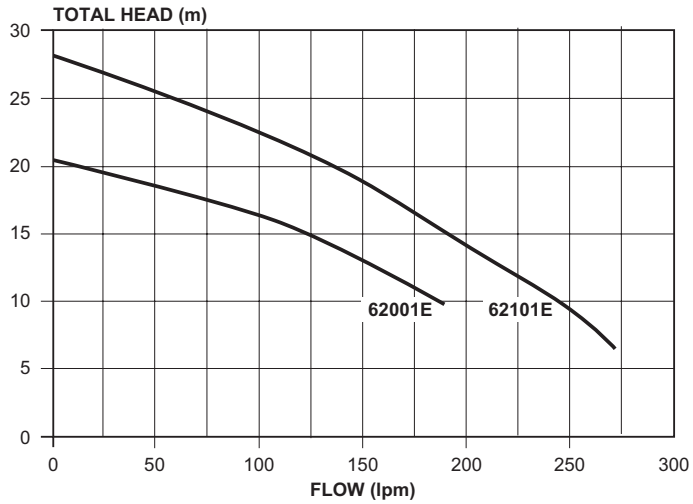

ELECTRICAL DATA

	62001E	62101E	62003E	62103E
Supply voltage	220-250V		380-415V	
Supply frequency	50Hz			
Full load current	6.8A	8.3A	2.9A	3.5A
Locked rotor current	27A	40A	24A	24A
Output power	1.15kW	1.58kW	1.15kW	1.58kW
Input power	1.6kW	2.0kW	1.6kW	2.0kW
Insulation class	Class F			
IP rating	IP56			

DIMENSIONS

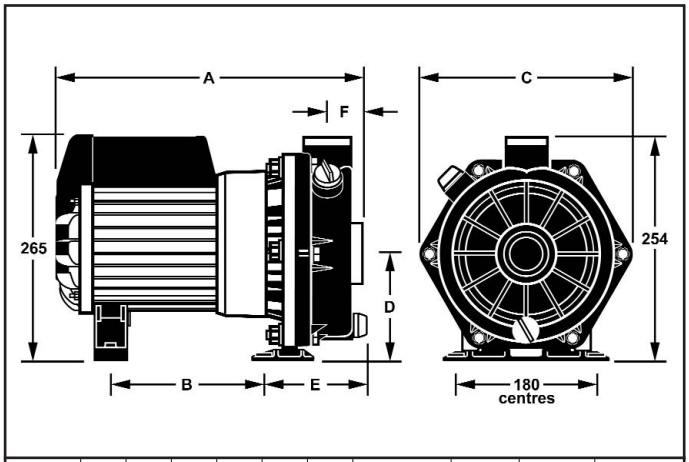

Model	A	B	C	D	E	F	Mounting Holes Dia.	Inlet B.S.P.	Outlet B.S.P.	Net Weight
62001E	345	175	250	124	113	40	10mm	1½"F	1¼"F	16.5kg
62101E	365	195	250	124	113	40	10mm	1½"F	1¼"F	19kg
62003E 62103E	365	195	250	124	113	40	10mm	1½"F	1¼"F	19kg

All dimensions in mm unless otherwise stated.

INSTALLATION & PRIMING

- Installation with suction lift require a good quality foot valve to avoid loss of prime.
- To prime, fill pump body and suction line through priming plug hole located above suction inlet and replace plug.

This literature is not a complete guide to product usage. Further information is available from your Davey dealer, Davey Customer Service Centre and from the relevant product Installation and Operating Instructions. This data sheet must be read in conjunction with the relevant product Installation and Operating Instructions and all applicable statutory requirements. Product specifications may change without notice.
® Davey and Dynaflo are registered trademarks of Davey Products Pty Ltd. © Davey Products Pty Ltd 2000.

Visit Davey Pumps on-line for further information
www.davey.com.au

DEPEND ON DAVEY

Davey Products Pty Ltd
Member of the GUD Holdings Ltd Group
ABN 18 066 327 517
Head Office and Manufacturing
6 Lakeview Drive,
Scoresby, Australia 3179
Ph: +61 3 9730 9222
Fax: +61 3 9753 4100
Website: www.davey.com.au
Customer Service Centre
Ph: 1300 367 866
Fax: 1300 369 119
E-mail: sales@davey.com.au
Interstate Offices
Sydney - Brisbane - Adelaide
Perth - Townsville

International
6 Lakeview Drive,
Scoresby, Australia 3179
Ph: +61 3 9730 9121
Fax: +61 3 9753 4248
E-mail: export@davey.com.au

Germany
Kantstrasse 47,
04275 Leipzig
Ph: +49 341 301 0412
Fax: +49 341 301 0413
E-mail: akrenz@daveyeurope.com

New Zealand
2 Rothwell Avenue,
North Harbour, Auckland 1330
Ph: +64 9 914 3680
Fax: +64 9 914 3685
Website: www.daveynz.co.nz
E-mail: sales@daveynz.co.nz

USA
Davey Pumps Inc.
1005 N. Commons Drive
Aurora, Illinois 60504
Ph: +1 630 898 6976
Fax: +1 630 851 7744
Website: www.daveyusa.com
E-mail: sales@daveyusa.com

D889-1/2K/0205/GPW Supersedes D889/2K/0302/GPW